AC/DC METAL FACE LONG SENSING DISTANCE PROXIMITY SWITCH

M 18		M 18		M 18	
●	○	●	○	●	○
12 mm	20 mm	12 mm	20 mm	12 mm	20 mm
stainless steel		stainless steel		stainless steel	
●		●		●	

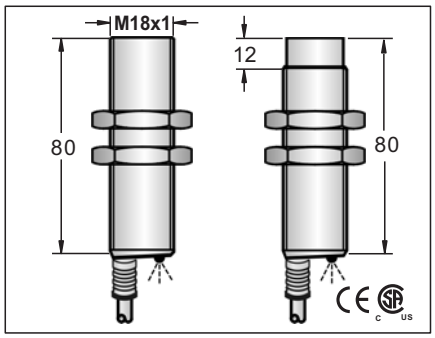

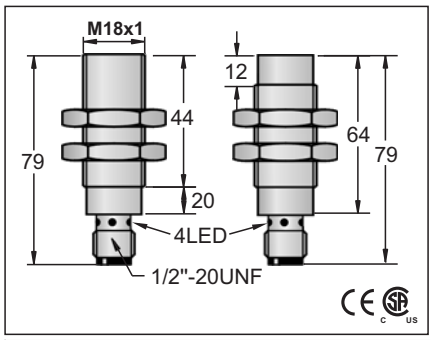

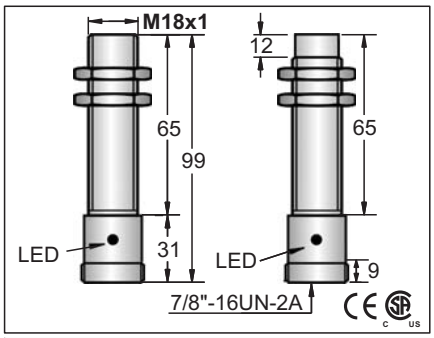

20-250 VAC, 50-60 Hz; 20-250 VDC		
DC RIPPLE <10%		
<2.5mA		
200mA		
<2.5mA		
2.2A for 20ms		
5mA		
<=10 VAC :<=8 VDC		
25HZ AC; 40 Hz DC		
10ms/10ms		
<15%(Sr)		
<1.0% (Sr)		
IP67		
-25°C~+70°C		
<10% (Sr)		
YES		
-		
-		
RFI>3V/m / EFT>1KV / ESD>4KV (contact)		
IEC 60947-5-2,Part 7.4.1 / IEC 60947-5-2,Part 7.4.2		
Stainless steel		
LCS1-1812U-A3L2	11	LCS2-1820U-A3L2
LCS1-1812U-B3L2	12	LCS2-1820U-B3L2
5.0∅44x0.1		
approx.161g		approx.160g

20-250 VAC, 50-60 Hz; 20-250 VDC		
DC RIPPLE <10%		
<2.5mA		
200mA		
<2.5mA		
2.2A for 20ms		
5mA		
<=10 VAC :<=8 VDC		
25HZ AC; 40 Hz DC		
10ms/10ms		
<15%(Sr)		
<1.0% (Sr)		
IP67		
-25°C~+70°C		
<10% (Sr)		
YES		
-		
-		
RFI>3V/m / EFT>1KV / ESD>4KV (contact)		
IEC 60947-5-2,Part 7.4.1 / IEC 60947-5-2,Part 7.4.2		
Stainless steel		
LCS1-1812U-AUL3	56	LCS2-1820U-AUL3
LCS1-1812U-BUL3	56	LCS2-1820U-BUL3
Approx.69 g		Approx.68 g

20-250 VAC, 50-60 Hz; 20-250 VDC		
DC RIPPLE <10%		
<2.5mA		
200mA		
<2.5mA		
2.2A for 20ms		
5mA		
<=10 VAC :<=8 VDC		
25HZ AC; 40 Hz DC		
10ms/10ms		
<15%(Sr)		
<1.0% (Sr)		
IP67		
-25°C~+70°C		
<10% (Sr)		
YES		
-		
-		
RFI>3V/m / EFT>1KV / ESD>4KV (contact)		
IEC 60947-5-2,Part 7.4.1 / IEC 60947-5-2,Part 7.4.2		
Stainless steel		
LCS1-1812U-AZL3	65	LCS2-1820U-AZL3
LCS1-1812U-BZL3	65	LCS2-1820U-BZL3
Approx.94 g		Approx.91 g

Note:
Coming Soon : Part numbers with underline

AC/DC METAL FACE LONG SENSING DISTANCE PROXIMITY SWITCH

M 30			M 30			M 30		
●	○		●	○		●	○	
20 mm	40 mm		20 mm	40 mm		20 mm	40 mm	
stainless steel			stainless steel			stainless steel		
●			●			●		
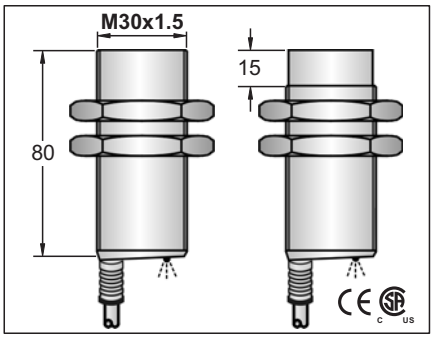			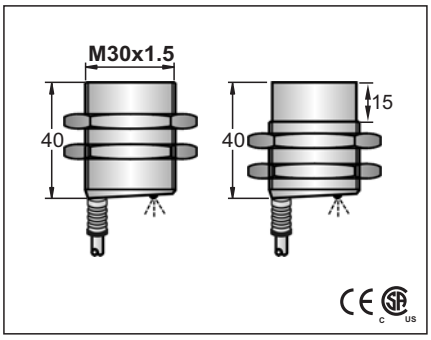			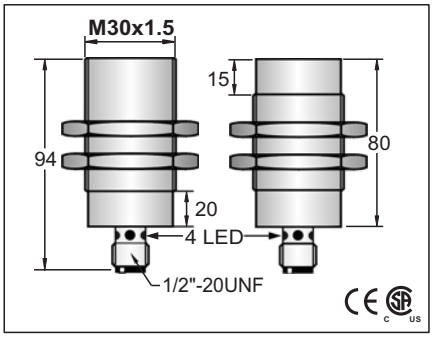		
20-250 VAC, 50-60 Hz; 20-250 VDC			20-250 VAC, 50-60 Hz; 20-250 VDC			20-250 VAC, 50-60 Hz; 20-250 VDC		
DC RIPPLE <10%			DC RIPPLE <10%			DC RIPPLE <10%		
<2.5mA			<2.5mA			<2.5mA		
200mA			200mA			200mA		
<2.5mA			<2.5mA			<2.5mA		
2.2A for 20ms			2.2A for 20ms			2.2A for 20ms		
5mA			5mA			5mA		
<=10 VAC :<=8 VDC			<=10 VAC :<=8 VDC			<=10 VAC :<=8 VDC		
25HZ AC; 40 Hz DC			25HZ AC; 40 Hz DC			25HZ AC; 40 Hz DC		
10ms/10ms			10ms/10ms			10ms/10ms		
<15%(Sr)			<15%(Sr)			<15%(Sr)		
<1.0% (Sr)			<1.0% (Sr)			<1.0% (Sr)		
IP67			IP67			IP67		
-25°C - +70°C			-25°C - +70°C			-25°C - +70°C		
<10% (Sr)			<10% (Sr)			<10% (Sr)		
YES			YES			YES		
-			-			-		
-			-			-		
RFI>3V/m / EFT>1KV / ESD>4KV (contact)			RFI>3V/m / EFT>1KV / ESD>4KV (contact)			RFI>3V/m / EFT>1KV / ESD>4KV (contact)		
IEC 60947-5-2,Part 7.4.1 / IEC 60947-5-2,Part 7.4.2			IEC 60947-5-2,Part 7.4.1 / IEC 60947-5-2,Part 7.4.2			IEC 60947-5-2,Part 7.4.1 / IEC 60947-5-2,Part 7.4.2		
Stainless steel			Stainless steel			Stainless steel		
LCS1-3020U-A3L2	11	LCS2-3040U-A3L2	LCS1-3020U-A3S2	11	LCS2-3040U-A3S2	LCS1-3020U-AUL3	56	LCS2-3040U-AUL3
LCS1-3020U-B3L2	12	LCS2-3040U-B3L2	LCS1-3020U-B3S2	12	LCS2-3040U-B3S2	LCS1-3020U-BUL3	56	LCS2-3040U-BUL3
5.8 ∅3x0.5			5.8 ∅3x0.5					
approx.247g	approx.237g		Approx.209 g	Approx.199 g		approx.147g	approx.137g	

Note:
Coming Soon : Part numbers with underline

AC/DC METAL FACE LONG SENSING DISTANCE PROXIMITY SWITCH

M 30			M 40			M 40		
●	○		●	○		●	○	
20 mm	40 mm		30 mm	60 mm		30 mm	60 mm	
Stainless steel			stainless steel			stainless steel		
●			●			●		
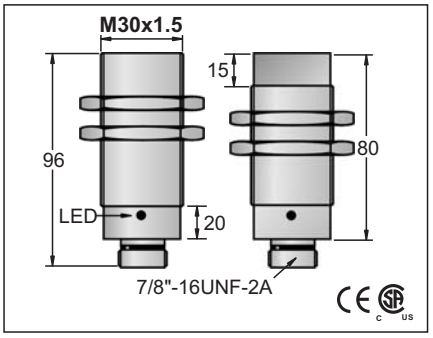			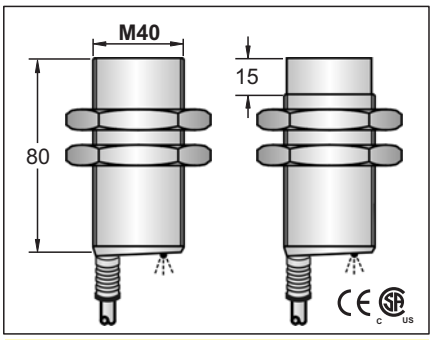			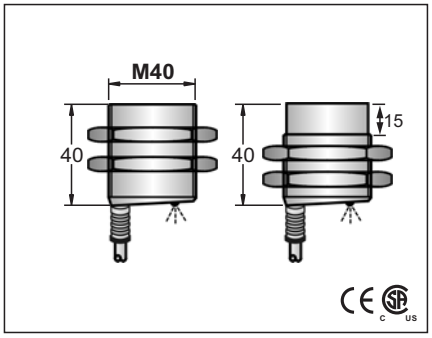		
20-250 VAC, 50-60 Hz; 20-250 VDC			20-250 VAC, 50-60 Hz; 20-250 VDC			20-250 VAC, 50-60 Hz; 20-250 VDC		
DC RIPPLE <10%			DC RIPPLE <10%			DC RIPPLE <10%		
<2.5mA			<2.5mA			<2.5mA		
200mA			200mA			200mA		
<2.5mA			<2.5mA			<2.5mA		
2.2A for 20ms			2.2A for 20ms			2.2A for 20ms		
5mA			5mA			5mA		
<=10 VAC :<=8 VDC			<=10 VAC :<=8 VDC			<=10 VAC :<=8 VDC		
25HZ AC; 40 Hz DC			25HZ AC; 40 Hz DC			25HZ AC; 40 Hz DC		
10ms/10ms			10ms/10ms			10ms/10ms		
<15%(Sr)			<15%(Sr)			<15%(Sr)		
<1.0% (Sr)			<1.0% (Sr)			<1.0% (Sr)		
IP67			IP67			IP67		
-25°C - +70°C			-25°C - +70°C			-25°C - +70°C		
<10% (Sr)			<10% (Sr)			<10% (Sr)		
YES			YES			YES		
-			-			-		
-			-			-		
RFI>3V/m / EFT>1KV / ESD>4KV (contact)			RFI>3V/m / EFT>1KV / ESD>4KV (contact)			RFI>3V/m / EFT>1KV / ESD>4KV (contact)		
IEC 60947-5-2,Part 7.4.1 / IEC 60947-5-2,Part 7.4.2			IEC 60947-5-2,Part 7.4.1 / IEC 60947-5-2,Part 7.4.2			IEC 60947-5-2,Part 7.4.1 / IEC 60947-5-2,Part 7.4.2		
Stainless steel			Stainless steel			Stainless steel		
LCS1-3020U-AZL3	65	LCS2-3040U-AZL3	LCS1-4030U-A3L2	11	LCS2-4060U-A3L2	LCS1-4030U-A3S2	11	LCS2-4060U-A3S2
LCS1-3020U-BZL3	65	LCS2-3040U-BZL3	LCS1-4030U-B3L2	12	LCS2-4060U-B3L2	LCS1-4030U-B3S2	12	LCS2-4060U-B3S2
			5.8∅3x0.5			5.8∅3x0.5		
Approx.187 g		Approx.179 g	approx.247g		approx.237g	Approx.209 g		Approx.199 g

Note:
Coming Soon : Part numbers with underline

AC/DC METAL FACE LONG SENSING DISTANCE PROXIMITY SWITCH

M 40		M 40	
●	○	●	○
30 mm	60 mm	30 mm	60 mm
stainless steel		Stainless steel	
●		●	

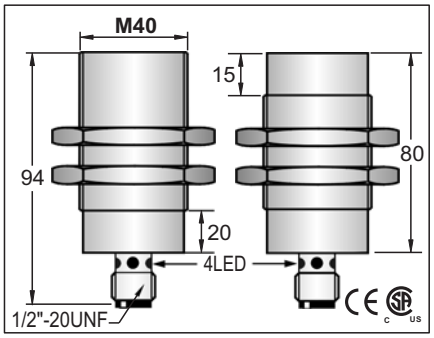

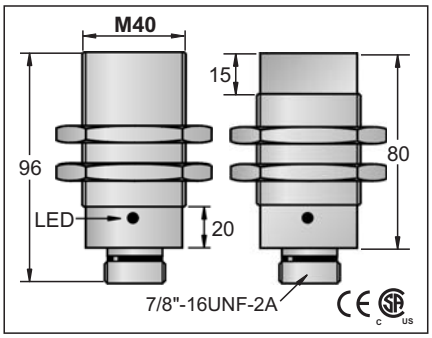

20-250 VAC, 50-60 Hz; 20-250 VDC	20-250 VAC, 50-60 Hz; 20-250 VDC
DC RIPPLE <10%	DC RIPPLE <10%
<2.5mA	<2.5mA
200mA	200mA
<2.5mA	<2.5mA
2.2A for 20ms	2.2A for 20ms
5mA	5mA
<=10 VAC :<=8 VDC	<=10 VAC :<=8 VDC
25HZ AC; 40 Hz DC	25HZ AC; 40 Hz DC
10ms/10ms	10ms/10ms
<15%(Sr)	<15%(Sr)
<1.0% (Sr)	<1.0% (Sr)
IP67	IP67
-25°C - +70°C	-25°C - +70°C
<10% (Sr)	<10% (Sr)
YES	YES
-	-
-	-
RFI>3V/m / EFT>1KV / ESD>4KV (contact)	RFI>3V/m / EFT>1KV / ESD>4KV (contact)
IEC 60947-5-2,Part 7.4.1 / IEC 60947-5-2,Part 7.4.2	IEC 60947-5-2,Part 7.4.1 / IEC 60947-5-2,Part 7.4.2
Stainless steel	Stainless steel

LCS1-4030U-AUL3	56	LCS2-4060U-AUL3	LCS1-4030U-AZL3	65	LCS2-4060U-AZL3
LCS1-4030U-BUL3	56	LCS2-4060U-BUL3	LCS1-4030U-BZL3	65	LCS2-4060U-BZL3

approx.147g	approx.137g
Approx.187 g	Approx.179 g

Note:
Coming Soon : Part numbers with underline